Digital Electronics (EC2L004)

Lecture 24: Asynchronous Sequential Logic

Introduction

- Synchronous sequential circuits
  - Flip-flops share a single clock

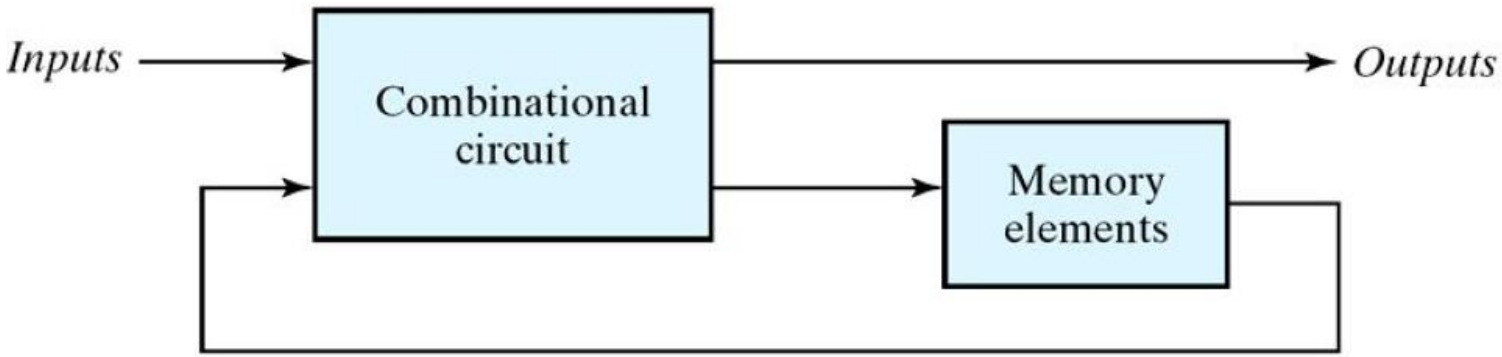

Block diagram of Sequential Circuit

- Asynchronous sequential circuits
  - no clock pulse
  - difficult to design

Introduction

- Asynchronous sequential circuits

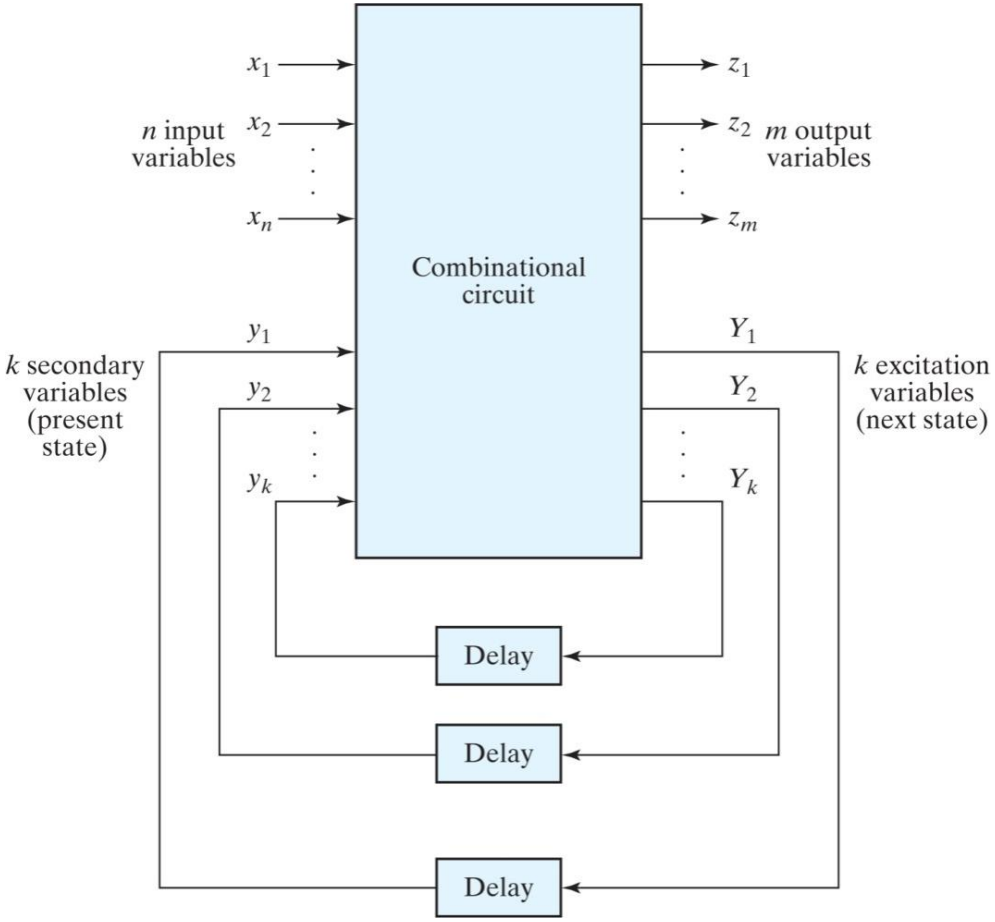

Block diagram of an asynchronous sequential circuit

Introduction

- Asynchronous sequential circuits
  - delay elements: the propagation delay
  - must attain a stable state before the input is changed to a new value
- DO NOT use asynchronous sequential circuits unless it is absolutely necessary.

Introduction

- Asynchronous sequential circuits
  - delay elements: the propagation delay
  - must attain a stable state before the input is changed to a new value
- DO NOT use asynchronous sequential circuits unless it is absolutely necessary.

Analysis Procedure

- The procedure
  - Determine all feedback loops
  - Assign Y/s (excitation variables), Yi's (the secondary variables)
  - Derive the Boolean functions of all Yi's
  - Plot each Y function in a map
  - Construct the state table
  - Circle the stable states

Example

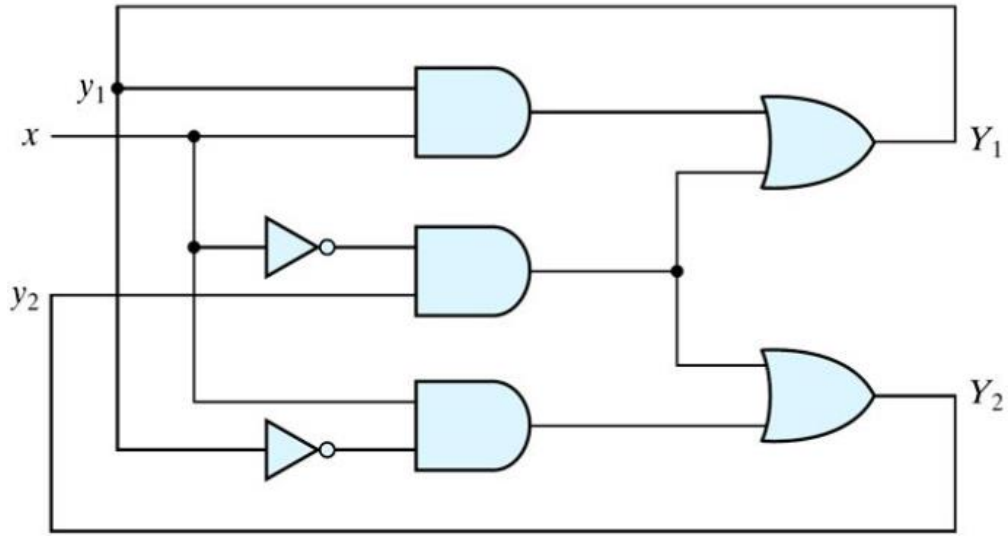

Example of asynchronous sequential circuit

The excitation variables Y_1 and Y_2

$$Y_1 = xy_1 + x'y_2$$

$$Y_2 = xy_1' + x'y_2$$

Maps and Transition Tables

y_1y_2 \ x	0	1
00	0	0
01	1	0
11	1	1
10	0	1

(a) Map for $Y_1 = xy_1 + x'y_2$

y_1y_2 \ x	0	1
00	0	1
01	1	1
11	1	0
10	0	0

(b) Map for $Y_2 = xy'_1 + x'y_2$

y_1y_2 \ x	0	1
00	00	01
01	11	01
11	11	10
10	00	10

(c) Transition table

Circle the stable states where Y=y

Maps and Transition Tables (Cont'd)

- The difference
  - Synchronous design: state transition happens only when the triggering edge of the clock
  - Asynchronous design: the internal state can change immediately after a change in the input
- The total state
  - the internal state + the input value

Maps and Transition Tables (Cont'd)

- y: the present state, Y: the next state
- The state transition table

State Table for the Circuit of Fig.9.2

Present State		Next State			
		$x = 0$		$x = 1$	
0	0	0	0	0	1
0	1	1	1	0	1
1	0	0	0	1	0
1	1	1	1	1	0

Maps and Transition Tables (Cont'd)

- y: the present state, Y: the next state
- The state transition table

State Table for the Circuit of Fig.9.2

Present State		Next State			
		$x = 0$		$x = 1$	
0	0	0	0	0	1
0	1	1	1	0	1
1	0	0	0	1	0
1	1	1	1	1	0

Flow Table

- A state transition table with its internal state being symbolized with letters

$y \backslash x$	0	1
a	a	b
b	c	b
c	c	d
d	a	d

(a) Four states with one input

x_1x_2	00	01	11	10
a	a, 0	a, 0	a, 0	b , 0
b	a , 0	a , 0	b, 1	b, 0

(b) Two states with two inputs and one output

Flow Table (Cont'd)

- State assignment and derive the logic diagram

y \ x_1x_2	00	01	11	10
0	0	0	0	1
1	0	0	1	1

(a) Transition table
$Y = x_1x'_2 + x_1y$

y \ x_1x_2	00	01	11	10
0	0	0	0	0
1	0	0	1	0

(b) Map for output
$z = x_1x_2\,y$

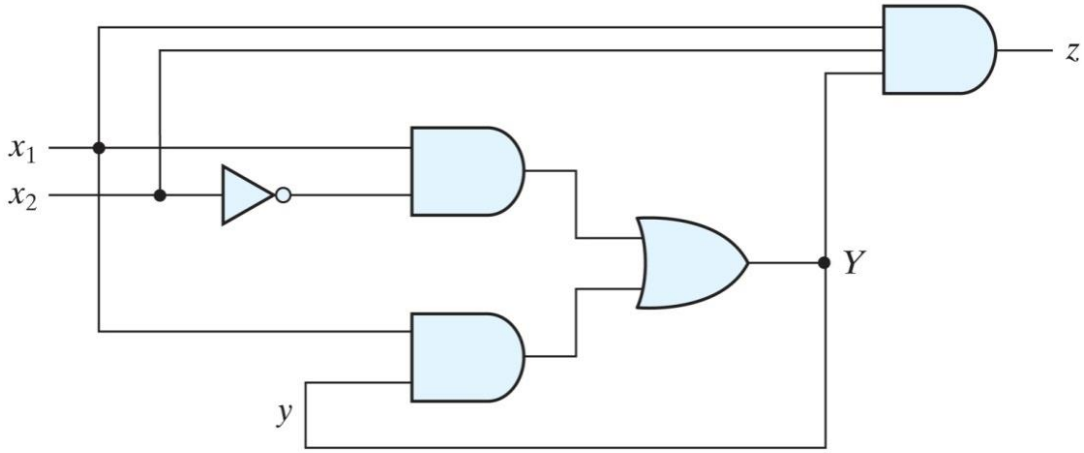

(c) Logic diagram

Race Conditions

- When two or more binary state variables change value

$$00 \rightarrow 11$$

  - $00 \rightarrow 10 \rightarrow 11$ or $00 \rightarrow 01 \rightarrow 11$

- A noncritical race:
  - if they reach the same final state
  - Otherwise, a critical state

Examples of noncritical races

y_1y_2 \ x	0	1
00	00	11
01		11
11		11
10		11

(a) Possible transitions:

$00 \longrightarrow 11$

$00 \longrightarrow 01 \longrightarrow 11$

$00 \longrightarrow 10 \longrightarrow 11$

y_1y_2 \ x	0	1
00	00	11
01		01
11		01
10		11

(b) Possible transitions:

$00 \longrightarrow 11 \longrightarrow 01$

$00 \longrightarrow 01$

$00 \longrightarrow 10 \longrightarrow 11 \longrightarrow 01$

Critical Race

y_1y_2 \ x	0	1
00	00	11
01		01
11		11
10		10

(a) Possible transitions:

$00 \longrightarrow 11$
$00 \longrightarrow 01$
$00 \longrightarrow 10$

y_1y_2 \ x	0	1
00	00	11
01		11
11		11
10		10

(b) Possible transitions:

$00 \longrightarrow 11$
$00 \longrightarrow 01 \longrightarrow 11$
$00 \longrightarrow 10$

Races

- Races may be avoided
  - race-free assignment: only one state can change at any one time
  - Insert intermediate unstable states with a unique state-variable change
- A Cycle
  - A unique sequence of unstable states

A Cycle

- A unique sequence of unstable states

y_1y_2 \ x	0	1
00	00	01
01		11
11		10
10		10

(a) State transition:
00 → 01 → 11 → 10

y_1y_2 \ x	0	1
00	00	01
01		11
11		11
10		10

(b) State transition:
00 → 01 → 11

y_1y_2 \ x	0	1
00	00	01
01		11
11		10
10		01

(c) Unstable
→ 01 → 11 → 10

Stability Considerations

- A square waveform generator ?

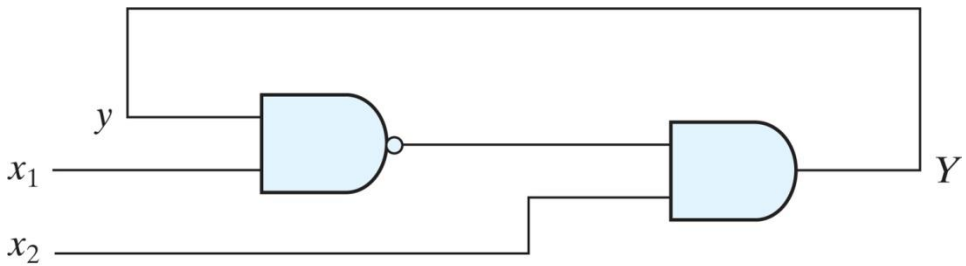

(a) Logic diagram

y \ x_1x_2	00	01	11	10
0	0	1	1	0
1	0	1	0	0

(b) Transition table

Example of an unstable circuit

Hazards

- Unwanted switching transient at the output
  - Different paths exhibit different propagation delays
  - Temporary false-output value in combinational circuit
  - May result in a transition to a wrong stable state in asynchronous sequential circuits

Hazards in Combinational Circuits

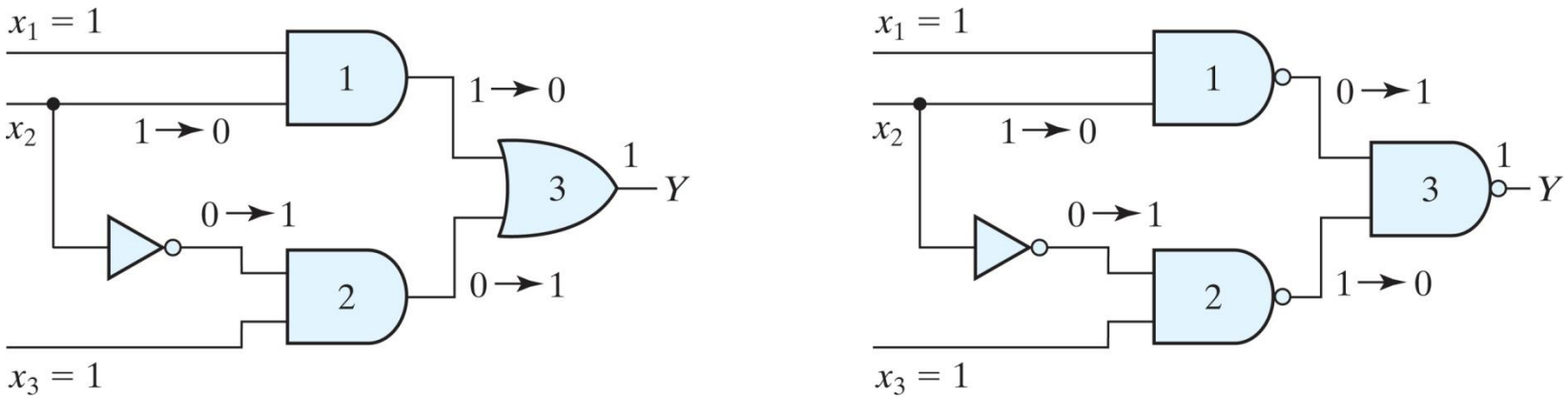

(a) AND–OR circuit (b) NAND circuit

Circuits with hazards

Hazards in Combinational Circuits

- Static 1-hazard (sum of products)
  - The removal of static 1-hazard guarantees that no static 0-hazards or dynamic hazards

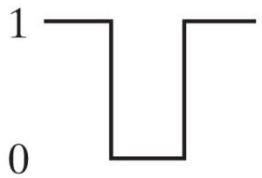

(a) Static 1-hazard

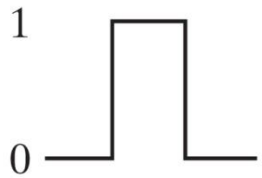

(b) Static 0-hazard

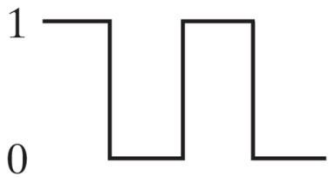

(c) Dynamic hazard

Hazards in Combinational Circuits

- The remedy
  - the circuit moves from one product term to another
  - additional redundant gate

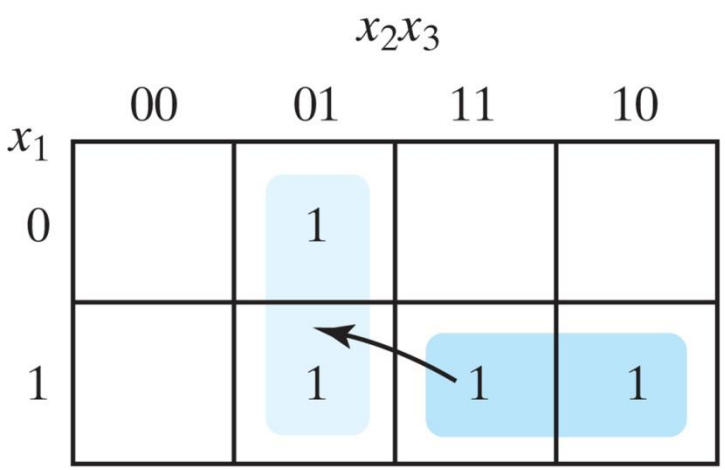

(a) $Y = x_1 x_2 + x'_2 x_3$

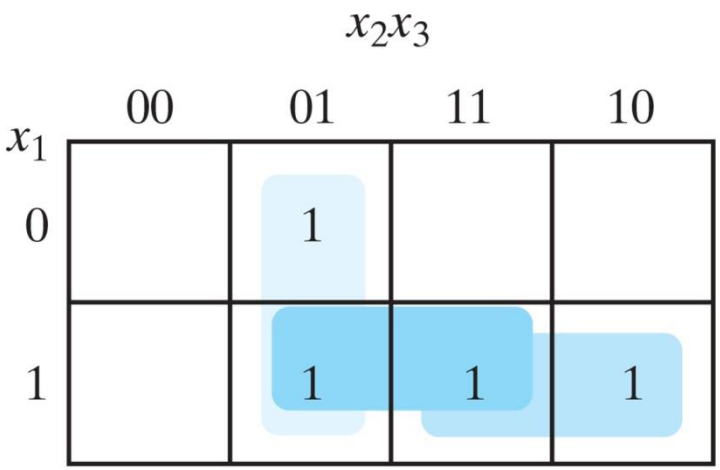

(b) $Y = x_1 x_2 + x'_2 x_3 + x_1 x_3$

Maps illustrating a hazard and its removal

Hazards in Combinational Circuits

- Hazard-free circuit

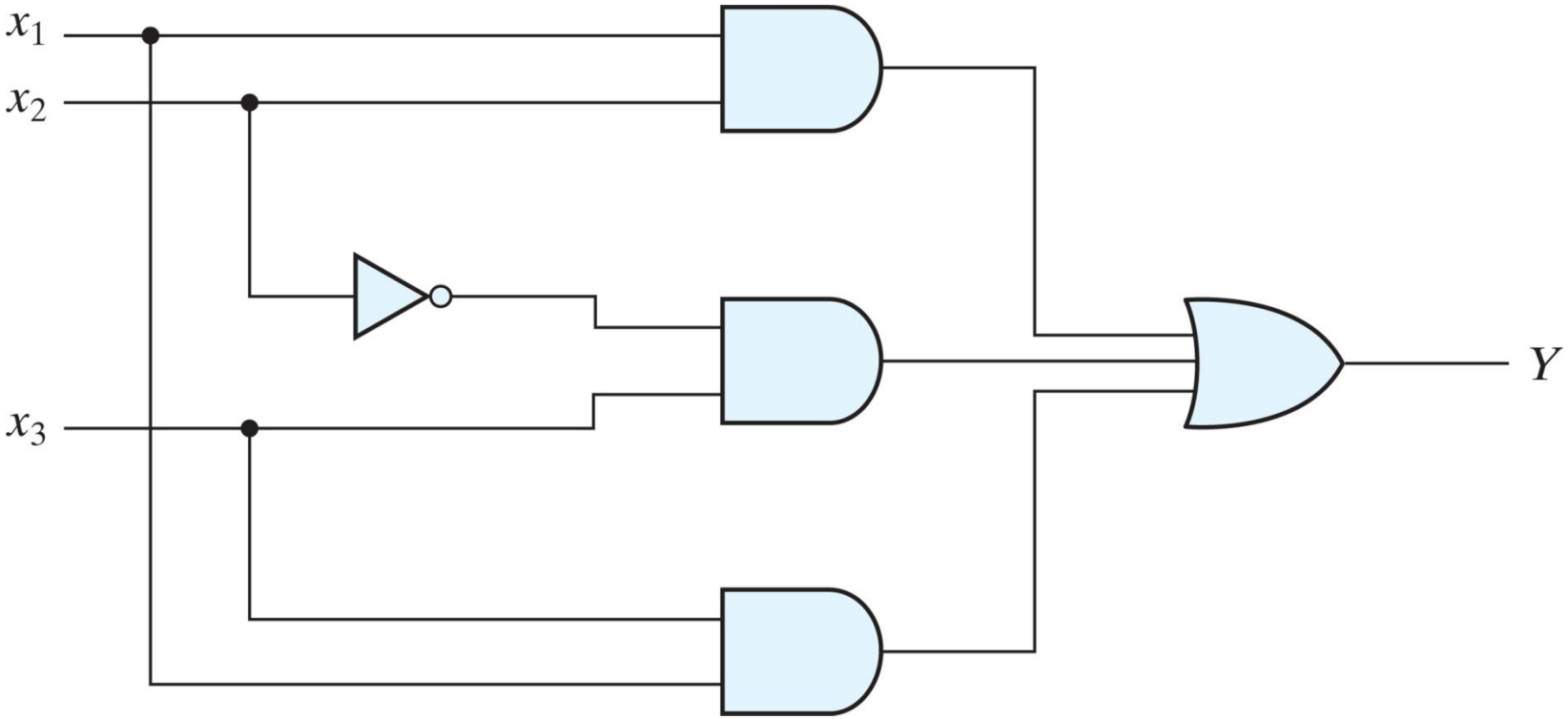

References

- Chapter 9, Digital Design Morris Mano

- Disclaimer: “I don’t claim the ownership of all the slides, some of the material is picked up from various publicly available sources on the internet”.

Thank you